MODEL: **Delabie DLB-98401230**

DELABIE

TEMPOMATIC Mix 3, battery-operated tap (mixer)

Accreditation: WRAS
Controls: Battery operated
Mount: Deck mounted
Tap Type: Tempomatic Mix 3

FEATURES & BENEFITS

- WRAS approved.
- Flow straightener set at 3 lpm at 3 bar. Flow rate can be adjusted if pressure < 3 bar.
- 6V Lithium battery, solenoid valves and electronic controls integrated in the body of the tap.
- Infra-red presence detection.
- PEX flexibles with integrated filters.
- Chrome-plated brass body with reinforced fixings
- Anti-blocking safety & temp. limiter.
- Duty flush (for ~60 seconds 24 hours after last use)

TECHNICAL INFO

- Drop height: 100mm.
- Spout length: 120mm.
- Flow rate: 3 lpm.

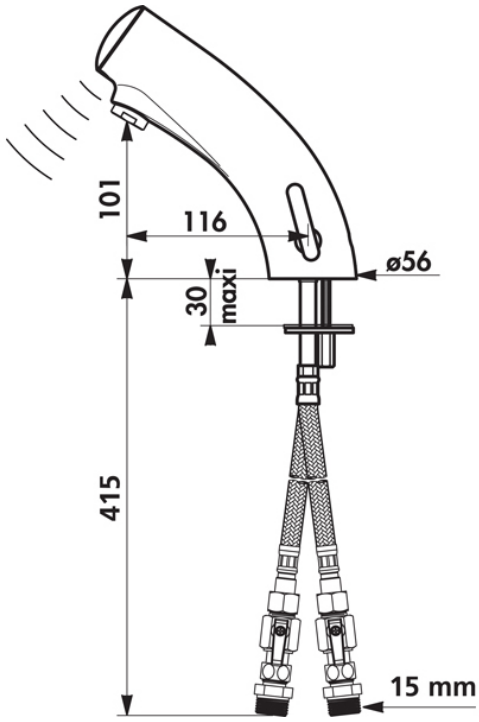

Dimensions are in millimeters. If a Cad file is required please visit www.mechline.com.

MECHLINE

MECHLINE DEVELOPMENTS LIMITED
Tel: +44 (0)1908 261511 | Email: info@mechline.com | Web: www.mechline.com

©2019 All rights reserved. All material on these pages, including and without limitation text, logos, icons, photographs and all other artwork, is copyright material of Mechline Developments Ltd, unless otherwise stated. Commercial use of this material may only be made with the express, prior, written permission of Mechline. This includes material provided by any third party, including material obtained through links to other sites from Mechline's pages or its af liates and commercial associates. Material and information included are correct at time of print. Intending buyers and users must satisfy themselves as to the suitability and safety of the products for their particular purposes and duties. Dimensions shown in mm unless otherwise stated. Product accreditation may not apply to all products in the relevant range. Please contact Mechline to con rm. Unless otherwise stated, all products carry a warranty of twelve (12) months against manufacturing defect or workmanship on parts with no inclusion for labour or site attendance.