MODEL: **Delabie DLB-49000615**

DELABIE



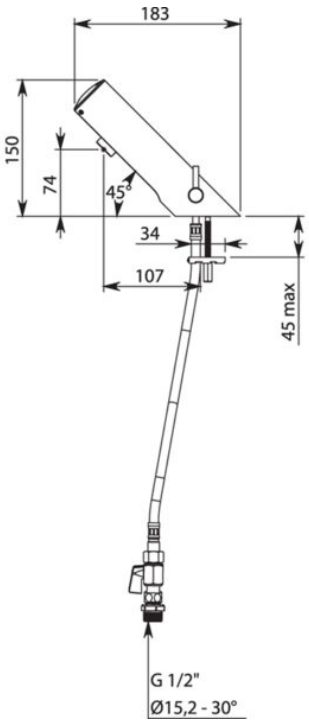

Dimensions are in millimeters. If a Cad file is required please visit www.mechline.com.

Deck mounted TEMPOMATIC 4 electronic mixer tap

Controls: Battery operated
Mount: Deck mounted
Tap Type: Tempomatic 4

FEATURES & BENEFITS

- Battery-operated with integrated 123 6V Lithium batteries
- Water savings up to 90 %
- Total hygiene : no manual contact
- Anti-bacterial proliferation duty flush (~60 seconds every 24 hours after last use).
- Reduced-stagnation solenoid valve and electronic unit integrated into the body of the mixer
- Flow rate pre-set at 3 lpm at 3 bar, can be adjusted from 1.5 - 6 lpm
- Scale-resistant flow straightener
- Active, infrared presence detection, sensor at the end of the spout optimises detection
- Chrome-plated stainless steel body
- Cap fixed in place by 2 concealed screws
- PEX flexibles Ø 15mm for compression fittings with stopcocks, filters and non-return valves
- Fixing reinforced by two stainless steel rods
- Anti-blocking security
- Side temperature control with long lever and adjustable maximum temperature limiter.

TECHNICAL INFO

- Flow rate pre-set at 3 lpm at 3 bar, can be adjusted from 1.4 - 6 lpm.
- PEX flexibles Ø 15mm for compression fittings with stopcocks, filters and non-return valves
- Total height: 150mm
- Product material: Chrome plated stainless steel body
- Battery operated supplied with 6v 123 lithium batteries
- WRAS approved
- Product weight: 1.02kg

MECHLINE DEVELOPMENTS LIMITED
Tel: +44 (0)1908 261511 | Email: info@mechline.com | Web: www.mechline.com

©2019 All rights reserved. All material on these pages, including and without limitation text, logos, icons, photographs and all other artwork, is copyright material of Mechline Developments Ltd, unless otherwise stated. Commercial use of this material may only be made with the express, prior, written permission of Mechline. This includes material provided by any third party, including material obtained through links to other sites from Mechline's pages or its af liates and commercial associates. Material and information included are correct at time of print. Intending buyers and users must satisfy themselves as to the suitability and safety of the products for their particular purposes and duties. Dimensions shown in mm unless otherwise stated. Product accreditation may not apply to all products in the relevant range. Please contact Mechline to con rm. Unless otherwise stated, all products carry a warranty of twelve (12) months against manufacturing defect or workmanship on parts with no inclusion for labour or site attendance.