MODEL: **Delabie DLB-378MCH15**

DELABIE



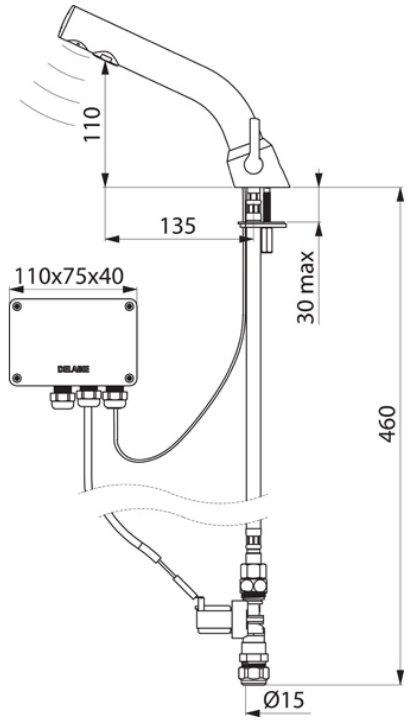

Dimensions are in millimeters. If a Cad file is required please visit www.mechline.com.

Delabie BINOPTIC mixer tap – MAINS supply model

Controls: Mains supply
Mount: Deck mounted
Tap Type: Binoptic Mixer

FEATURES & BENEFITS

- Independent IP65 electronic control unit.
- 230/12V mains supply with transformer.
- 15mm connector for compression fittings.
- Flow rate pre-set at 3 lpm at 3 bar, can be adjusted from 1.5 to 6 lpm.
- Scale resistant flow straightener.
- Adjustable duty flush (pre-set flush ~60 sec. every 24hr after last use).
- Active, infrared presence detection, sensor at the end of the spout optimises detection.
- Chrome-plated brass body.
- PEX flexible with filter and solenoid valve.
- Reinforced fixing.
- Anti-blocking safety.
- Spout with smooth interior and low volume of water (reduces bacterial niches).
- Side temperature control with adjustable maximum temperature limiter.

TECHNICAL INFO

- Connection(s): M□-inch.
- Drop height: 90mm.
- Spout length: 125mm.
- Flow rate: 3 lpm can be adjusted from 1.4 - 6 lpm
- Tap hole size: 34mm
- Product weight: 1.39kg
- Side temperature control with removable anti scald
- 230/12v mains supply with transformer
- Product material: Chrome plated brass body with PEX flexible hoses
- Independant IP65 electronic control unit
- CE approval

MECHLINE DEVELOPMENTS LIMITED
Tel: +44 (0)1908 261511 | Email: info@mechline.com | Web: www.mechline.com

©2019 All rights reserved. All material on these pages, including and without limitation text, logos, icons, photographs and all other artwork, is copyright material of Mechline Developments Ltd, unless otherwise stated. Commercial use of this material may only be made with the express, prior, written permission of Mechline. This includes material provided by any third party, including material obtained through links to other sites from Mechline's pages or its af liates and commercial associates. Material and information included are correct at time of print. Intending buyers and users must satisfy themselves as to the suitability and safety of the products for their particular purposes and duties. Dimensions shown in mm unless otherwise stated. Product accreditation may not apply to all products in the relevant range. Please contact Mechline to con rm. Unless otherwise stated, all products carry a warranty of twelve (12) months against manufacturing defect or workmanship on parts with no inclusion for labour or site attendance.