MODEL: **Delabie DLB-74250015**

DELABIE



Controls: Soft-touch
Mount: Deck mounted
Tap Type: Time flow

FEATURES & BENEFITS

- Deck-mounted time flow basin tap.
- Soft-touch operation.
- Water-savings up to 85%.
- Smooth design to significantly reduce the risk of bacterial development.
- Time flow 7 seconds.
- Flow rate pre-set at 3 lpm at 3 bar, can be adjusted from 1.5 to 6 LPM.
- Tamper proof scale-resistant flow straightener.
- Solid chrome-plated brass body.

TECHNICAL INFO

- Connection(s): M½-inch.
- Worktop hole: 25-35mm.
- Drop height: 85mm.
- Spout length: 100mm.
- Flow rate: 3 lpm, can be adjusted from 1.4 - 6 lpm
- Product material: Chrome plated brass
- Time flow: 7 seconds
- PEX flexible hoses supplied
- WRAS approved
- Max recommended temperature 60°C
- Product weight:

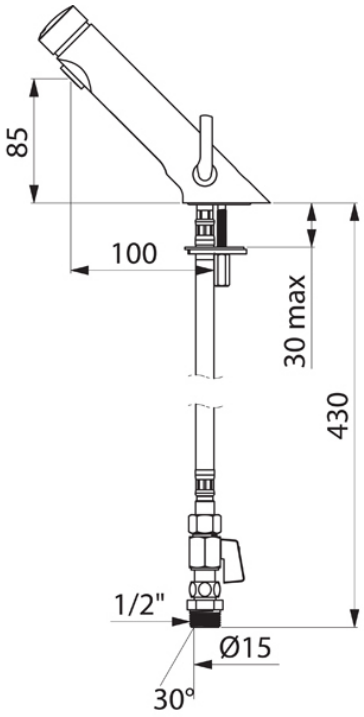

Dimensions are in millimeters. If a Cad file is required please visit www.mechline.com.

MECHLINE DEVELOPMENTS LIMITED
Tel: +44 (0)1908 261511 | Email: info@mechline.com | Web: www.mechline.com

©2019 All rights reserved. All material on these pages, including and without limitation text, logos, icons, photographs and all other artwork, is copyright material of Mechline Developments Ltd, unless otherwise stated. Commercial use of this material may only be made with the express, prior, written permission of Mechline. This includes material provided by any third party, including material obtained through links to other sites from Mechline's pages or its af liates and commercial associates. Material and information included are correct at time of print. Intending buyers and users must satisfy themselves as to the suitability and safety of the products for their particular purposes and duties. Dimensions shown in mm unless otherwise stated. Product accreditation may not apply to all products in the relevant range. Please contact Mechline to con rm. Unless otherwise stated, all products carry a warranty of twelve (12) months against manufacturing defect or workmanship on parts with no inclusion for labour or site attendance.