MODEL: **BaSix WS4-MT**

BASIX

BaSix Hand Wash Station with 'auto shut-off' single LEVER tap and manual mixer

Basin Range: WS4
Controls: Auto shut-off

FEATURES & BENEFITS

- Range of hygienic hand washing solutions.
- Helps operations meet their requirement to provide hand-washing stations on site.
- Good and safe habits are more easily followed and enforced.

TECHNICAL INFO

- Dimensions: O/D: 384 x 333 x 138 Bowl: 300 dia x 138mm deep
- Basin material: 304 Stainless Steel
- Basin weight: 2.33kg
- One and one quarter inch waste fitting supplied
- Supplied with manual mixing valve for hot & cold supplies with integrally fitted check valves
- Tap used on this basin are DLB-1490880

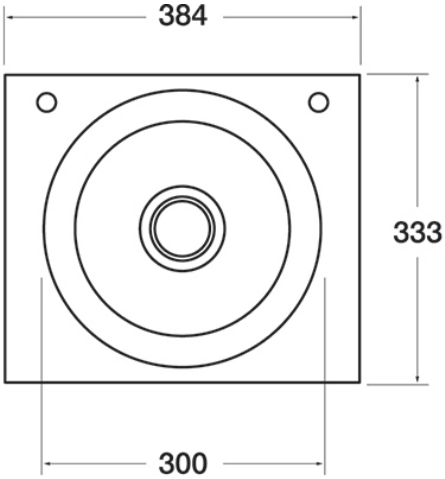

Dimensions are in millimeters. If a Cad file is required please visit www.mechline.com.

MECHLINE

MECHLINE DEVELOPMENTS LIMITED
Tel: +44 (0)1908 261511 | Email: info@mechline.com | Web: www.mechline.com

©2019 All rights reserved. All material on these pages, including and without limitation text, logos, icons, photographs and all other artwork, is copyright material of Mechline Developments Ltd, unless otherwise stated. Commercial use of this material may only be made with the express, prior, written permission of Mechline. This includes material provided by any third party, including material obtained through links to other sites from Mechline's pages or its af liates and commercial associates. Material and information included are correct at time of print. Intending buyers and users must satisfy themselves as to the suitability and safety of the products for their particular purposes and duties. Dimensions shown in mm unless otherwise stated. Product accreditation may not apply to all products in the relevant range. Please contact Mechline to con rm. Unless otherwise stated, all products carry a warranty of twelve (12) months against manufacturing defect or workmanship on parts with no inclusion for labour or site attendance.