MODEL: **BaSix WS3-KVS**

BASIX

BaSix Hand Wash Station. 'Push-Front', Hands-Free operation. Includes swivel spout, M-MX91 manual mixer, water hose and tap hole stopper

Basin Range: WS3
Controls: Hands-Free
Controls: Hands-free 'Push Front'

FEATURES & BENEFITS

- Range of hygienic hand washing solutions
- Helps operations meet their requirement to provide hand-washing stations on site.
- Auto shut-off valve drastically reducing water usage
- Good and safe habits are more easily followed and enforced.

TECHNICAL INFO

- Dimensions: O/D: 300 x 320 x 195mm Bowl: 260 dia x 150mm deep
- Flow rate at 3 bar of pressure is 7.33 litres per minute
- Basin material: 304 Stainless Steel
- Product weight: 3.32kg
- One and one quarter inch waste fitting supplied
- Supplied with manual mixing valve for hot & cold supplies with integrally fitted check valves

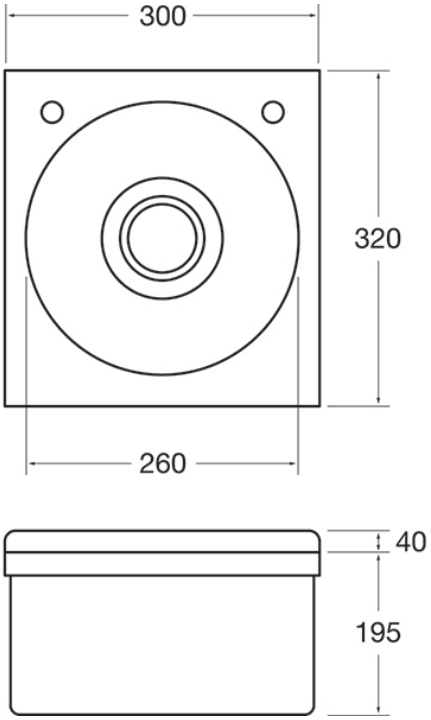

Dimensions are in millimeters. If a Cad file is required please visit www.mechline.com.

MECHLINE

MECHLINE DEVELOPMENTS LIMITED
Tel: +44 (0)1908 261511 | Email: info@mechline.com | Web: www.mechline.com

©2019 All rights reserved. All material on these pages, including and without limitation text, logos, icons, photographs and all other artwork, is copyright material of Mechline Developments Ltd, unless otherwise stated. Commercial use of this material may only be made with the express, prior, written permission of Mechline. This includes material provided by any third party, including material obtained through links to other sites from Mechline's pages or its af liates and commercial associates. Material and information included are correct at time of print. Intending buyers and users must satisfy themselves as to the suitability and safety of the products for their particular purposes and duties. Dimensions shown in mm unless otherwise stated. Product accreditation may not apply to all products in the relevant range. Please contact Mechline to con rm. Unless otherwise stated, all products carry a warranty of twelve (12) months against manufacturing defect or workmanship on parts with no inclusion for labour or site attendance.