MODEL: **BaSix WS1-W-BUB**

BASIX

Drinks Station – wall mounted, complete with WS1 White polyethylene (HDPE) basin & bubbler tap (includes tap hole stopper)

Accreditation: WRAS
Basin Range: Drinks Station
Connection(s): Connections: -inch BSP external thread and ¼-inch BSP internal thread
Controls: Soft-touch

FEATURES & BENEFITS

- WRAS approved
- Enables businesses to join the national drinking water scheme by offering easily accessible drinking water for staff, customers and the public
- Stylish, curved design. Ideal for public and staff areas, kitchens, changing/wash rooms
- Soft-touch press buttons with built in auto shut-off valve require no user effort
- Depth of bowl reduces splashback and protects the floor from hazardous spills
- Overall design function encourages reuse and recycling of drinks containers, helping to protect the environment
- Chrome-plated water bubbler is robust, corrosion resistant and easy to clean
- Adjustable flow screws allow the flow rates to be quickly and easily modified (using an Allen key)
- EPDM rubber o-rings
- Double filter, to ensure users a thick and uniform water flow, to increase hygienic use and convenience
- Supplied with flexible connection hose - 10mm bore, 150mm length, -inch F x 15mm compression fittings
- SaniTru¨ antimicrobial additive embedded in the basin material resists mould, mildew & grime to provide a cleaner surface
- Optional high grade polycarbonate ABS plastic splashback available

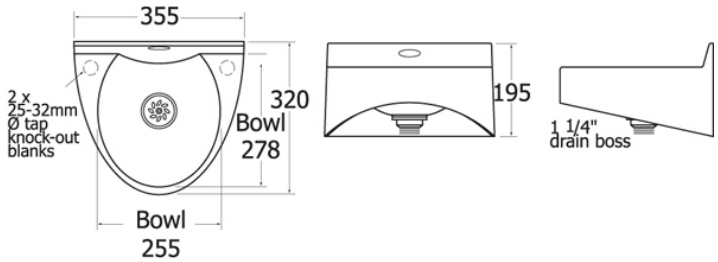

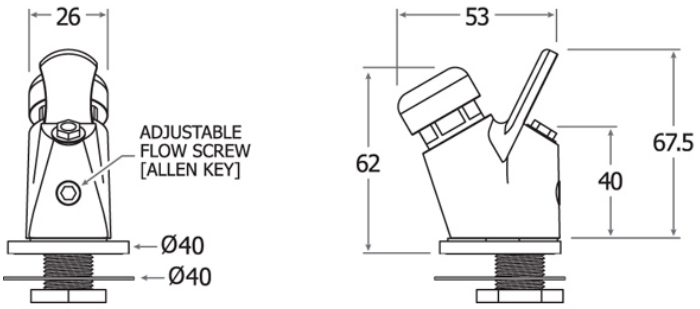

Dimensions are in millimeters. If a Cad file is required please visit www.mechline.com.

MECHLINE

MECHLINE DEVELOPMENTS LIMITED
Tel: +44 (0)1908 261511 | Email: info@mechline.com | Web: www.mechline.com

©2019 All rights reserved. All material on these pages, including and without limitation text, logos, icons, photographs and all other artwork, is copyright material of Mechline Developments Ltd, unless otherwise stated. Commercial use of this material may only be made with the express, prior, written permission of Mechline. This includes material provided by any third party, including material obtained through links to other sites from Mechline's pages or its af liates and commercial associates. Material and information included are correct at time of print. Intending buyers and users must satisfy themselves as to the suitability and safety of the products for their particular purposes and duties. Dimensions shown in mm unless otherwise stated. Product accreditation may not apply to all products in the relevant range. Please contact Mechline to con rm. Unless otherwise stated, all products carry a warranty of twelve (12) months against manufacturing defect or workmanship on parts with no inclusion for labour or site attendance.