MODEL: **AquaTechnix TX-PR-40D-SH-BF1**

AQUATECHNIX



AquaTechnix Pre-Rinse Spray. DOME head operated TX-PR-40D base / SHORT height / BF1 bowl filler H: 815mm

Accreditation: Kiwa KUKreg4 1+
Tap Hole Centres: 180mm
Base: TX-PR-40D
Bowl Filler: 150mm bowl filler (BF1)
Connection(s): ½-inch
Controls: Dome
Height: Short
Model Range: TX-40
Mount: Panel mounted
Pedestal: Twin
Water Feed: Twin Monobloc

FEATURES & BENEFITS

- Ergonomic in design and functionality
- Modern, hygienic and practical design comes pre-assembled ready to install.
- All assembled models are factory tested up to 6 bar for quality assurance.
- Complete interchangeability between all bodies, spouts and pre-rinses means that product use can easily be changed on site at a later date.
- Includes PosiStop protected lever and dome heads for long life and reliability for all models and Brass Back Nuts
- Choice of height and bowl filler available
- Built in check valve for backflow protection
- Water saving options for spray gun and bowl filling spout included

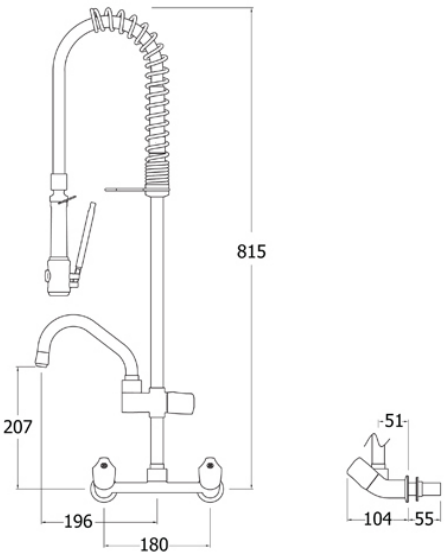

TECHNICAL INFO

- Connection: ½-inch BSP male thread 180mm centres
- 30mm maximum panel thickness
- Hole cut out requirement 25-28mm x2 180mm centres
- Height: 815mm
- Product weight: 4.4kg
- Recommended dynamic water pressure range: 1.5 - 5 bar. Max hot water temperature 60°C
- Flow rates for all TX-PR-40 models - tested at 3 bar pressure: SPRAY GUN WATER-SAVING face plate: 4.52 l/m. SPRAY GUN STANDARD face plate: 10.33 l/m. BOWL FILLER WATER-SAVING diffuser: 3.70 l/m. BOWL FILLER STANDARD diffuser: 9.55 l/m.
- 2 year parts warranty
- Certified to KUK Reg4 1+ by Kiwa
- If this tap or combination tap is installed so that its base is no lower than the spillover level of the receiving vessel (for example, a sink or washbasin), a Type AUK3 air gap is achieved which permits installation of the tap in any premises where backflow protection up to Fluid Category 5 is required at the tap.

Dimensions are in millimeters. If a Cad file is required please visit www.mechline.com.

MECHLINE

MECHLINE DEVELOPMENTS LIMITED
Tel: +44 (0)1908 261511 | Email: info@mechline.com | Web: www.mechline.com

©2019 All rights reserved. All material on these pages, including and without limitation text, logos, icons, photographs and all other artwork, is copyright material of Mechline Developments Ltd, unless otherwise stated. Commercial use of this material may only be made with the express, prior, written permission of Mechline. This includes material provided by any third party, including material obtained through links to other sites from Mechline's pages or its af liates and commercial associates. Material and information included are correct at time of print. Intending buyers and users must satisfy themselves as to the suitability and safety of the products for their particular purposes and duties. Dimensions shown in mm unless otherwise stated. Product accreditation may not apply to all products in the relevant range. Please contact Mechline to con rm. Unless otherwise stated, all products carry a warranty of twelve (12) months against manufacturing defect or workmanship on parts with no inclusion for labour or site attendance.