MODEL: **AquaTechnix TX-B-112L**

AQUATECHNIX



AquaTechnix LEVER operated faucet TX-B-10 base with 300mm swivel spout. H: 325mm

Accreditation: Kiwa KUKreg4 1+
Base: TX-B-10
Connection(s): ½-inch
Controls: Lever
Model Range: TX-10
Mount: Deck mounted
Pedestal: Single Hole
Spout: 300mm swivel
Tap Type: Monobloc
Water Feed: Single Monobloc

FEATURES & BENEFITS

- Ergonomic in design and functionality.
- Modern, hygienic and practical design comes pre-assembled ready to install.
- All assembled models are factory tested up to 6 bar for quality assurance.
- Includes PosiStop protected lever and dome heads for long life and reliability for all models
- Water saving diffuser included as standard

TECHNICAL INFO

- Connection(s): ½-inch BSP male
- Height: 325mm
- Hole cut out requirement: 22-27mm
- Product material: nickel plated brass
- Product weight: 0.93kg
- Recommended working pressure: 1.5 - 5 bar
- Flow rates: standard diffuser 10.84 lpm water saving diffuser 4.11 lpm tested at 3 bar pressure
- Certified to KUK Reg4 1+ by Kiwa
- Max recommended temperature 60°C

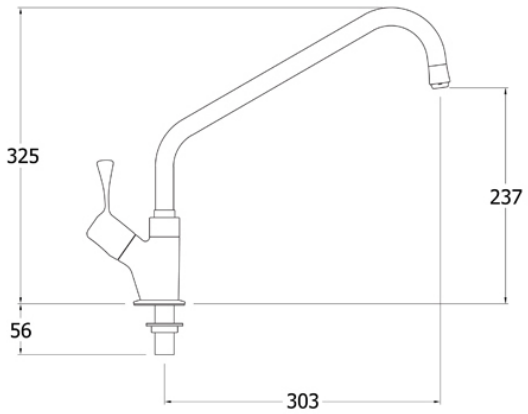

Dimensions are in millimeters. If a Cad file is required please visit www.mechline.com.

MECHLINE

MECHLINE DEVELOPMENTS LIMITED
Tel: +44 (0)1908 261511 | Email: info@mechline.com | Web: www.mechline.com

©2019 All rights reserved. All material on these pages, including and without limitation text, logos, icons, photographs and all other artwork, is copyright material of Mechline Developments Ltd, unless otherwise stated. Commercial use of this material may only be made with the express, prior, written permission of Mechline. This includes material provided by any third party, including material obtained through links to other sites from Mechline's pages or its af liates and commercial associates. Material and information included are correct at time of print. Intending buyers and users must satisfy themselves as to the suitability and safety of the products for their particular purposes and duties. Dimensions shown in mm unless otherwise stated. Product accreditation may not apply to all products in the relevant range. Please contact Mechline to con rm. Unless otherwise stated, all products carry a warranty of twelve (12) months against manufacturing defect or workmanship on parts with no inclusion for labour or site attendance.