MODEL: **AquaJet AJPR20-SH-BF3-E**

AQUAJET

AquaJet Pre-Rinse Spray. AJPR20 base / SHORT style/ BF3 bowl filler / EcO gun

Accreditation: Kiwa KUKreg4 1+
Base: AJPR20
Bowl Filler: 400mm bowl filler (BF3)
Connection(s): 2x (M) ½-inch
Controls: Lever
Model Range: AquaJet 20
Mount: Deck mounted
Pedestal: Single
Spray Gun: EcO
Style: Short
Water Feed: Twin Monobloc

FEATURES & BENEFITS

- A variety of choices to suit each application.
- Pre-assembled, ready to install - saves time on site.
- All assembled models are factory tested up to 6 bar for quality assurance.
- Choice of optional bowl fillers, water dispensing guns and accessories.
- Restraining device available to prevent hose from overstretching into basin, which reduces abuse and helps meet Water Board regulations.
- Super strong, food-grade, high-flow water hose.

TECHNICAL INFO

- Connection: ½-inch BSP male thread x2 on brass yolk supplied allowing direct connection for hot and cold feeds
- Hole cut out requirement 30-35mm
- Height: 700mm
- Product weight: 4.61kg
- Recommended dynamic water pressure range: 1.5 - 5 bar. Max hot water temperature 60°C
- Product material: nickel plated brass, 304 stainless steel braided hose with EPDM lined inner hose
- Flow rates tested at 3 bar dynamic pressure: 2.97 l/m Bowl Filler 5.97 l/m
- 1 year parts warranty
- Certified to KUK Reg4 1+ by Kiwa
- If this tap or combination tap is installed so that its base is no lower than the spillover level of the receiving vessel (for example, a sink or washbasin), a Type AUK3 air gap is achieved which permits installation of the tap in any premises where backflow protection up to Fluid Category 5 is required at the tap.

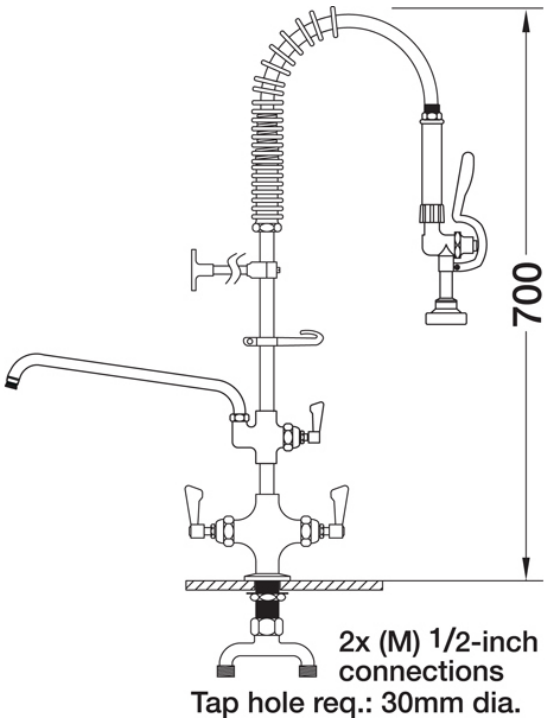

Dimensions are in millimeters. If a Cad file is required please visit www.mechline.com.

MECHLINE

MECHLINE DEVELOPMENTS LIMITED
Tel: +44 (0)1908 261511 | Email: info@mechline.com | Web: www.mechline.com

©2019 All rights reserved. All material on these pages, including and without limitation text, logos, icons, photographs and all other artwork, is copyright material of Mechline Developments Ltd, unless otherwise stated. Commercial use of this material may only be made with the express, prior, written permission of Mechline. This includes material provided by any third party, including material obtained through links to other sites from Mechline's pages or its af liates and commercial associates. Material and information included are correct at time of print. Intending buyers and users must satisfy themselves as to the suitability and safety of the products for their particular purposes and duties. Dimensions shown in mm unless otherwise stated. Product accreditation may not apply to all products in the relevant range. Please contact Mechline to con rm. Unless otherwise stated, all products carry a warranty of twelve (12) months against manufacturing defect or workmanship on parts with no inclusion for labour or site attendance.