MODEL: **AquaJet AJPR20-HM-BF2-E**

AQUAJET



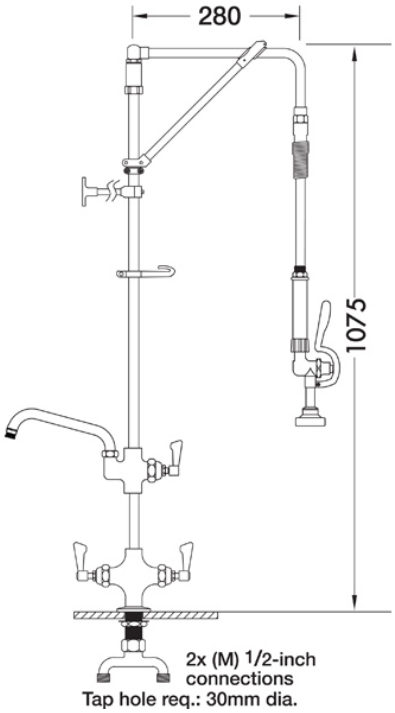

Dimensions are in millimeters. If a Cad file is required please visit www.mechline.com.

AquaJet Pre-Rinse Spray. AJPR20 base / HANGMAN style / BF2 bowl filler / EcO gun

Base: AJPR20
Bowl Filler: 300mm bowl filler (BF2)
Connection(s): 2x (M) ½-inch
Controls: Lever
Model Range: AquaJet 20
Mount: Deck mounted
Pedestal: Single
Spray Gun: EcO
Style: Hangman
Water Feed: Twin Monobloc

FEATURES & BENEFITS

- A variety of choices to suit each application.
- Pre-assembled, ready to install - saves time on site.
- All assembled models are factory tested up to 6 bar for quality assurance.
- Choice of optional bowl fillers, water dispensing guns and accessories.
- Restraining device available to prevent hose from overstretching into basin, which reduces abuse and helps meet Water Board regulations.
- Super strong, food-grade, high-flow water hose.

TECHNICAL INFO

- Connections: 2x (M) ½-inch
- Tap hole req: 30mm
- Flow rates: 2.97 lpm tested at 3 bar pressure.

MECHLINE

MECHLINE DEVELOPMENTS LIMITED
Tel: +44 (0)1908 261511 | Email: info@mechline.com | Web: www.mechline.com

©2019 All rights reserved. All material on these pages, including and without limitation text, logos, icons, photographs and all other artwork, is copyright material of Mechline Developments Ltd, unless otherwise stated. Commercial use of this material may only be made with the express, prior, written permission of Mechline. This includes material provided by any third party, including material obtained through links to other sites from Mechline's pages or its af liates and commercial associates. Material and information included are correct at time of print. Intending buyers and users must satisfy themselves as to the suitability and safety of the products for their particular purposes and duties. Dimensions shown in mm unless otherwise stated. Product accreditation may not apply to all products in the relevant range. Please contact Mechline to con rm. Unless otherwise stated, all products carry a warranty of twelve (12) months against manufacturing defect or workmanship on parts with no inclusion for labour or site attendance.