MODEL: **AquaJet AJ-B-3DJ18L**

AQUAJET



AquaJet Twin Mixer Tap with Lever control and 450mm Double Jointed Spout

Tap Hole Centres: 170-230mm adjustable
Accreditation: Kiwa KUKreg4 1+
Base: AJ-B-30
Connection(s): ½-inch
Controls: Lever
Model Range: AquaJet 30
Mount: Deck mounted
Pedestal: Twin Hole
Spout: 450mm double jointed
Tap Type: Twin Mixer
Water Feed: Twin

FEATURES & BENEFITS

- Comprehensive range of taps manufactured to meet the rigours of commercial catering.
- High quality, robust construction specifically designed for commercial kitchens.
- Easy lever operation.
- Selection of spouts to suit most applications.
- Spare parts available.

TECHNICAL INFO

- Connection(s): ½-inch BSP male
- Height: 320mm
- Hole cut out requirement: 2x 22-27mm with 170-230mm centres
- Built-in non return valve
- Product material: nickel plated brass
- Product weight: 2.14kg
- Recommended working pressure: 1.5 - 5 bar
- Flow rates: 6.09 lpm tested at 3 bar pressure
- Certified to KUK Reg4 1+ by Kiwa
- Max recommended temperature 60°C

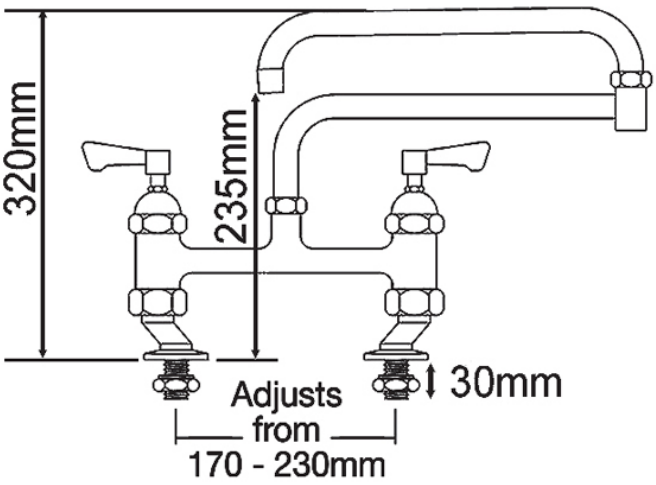

Dimensions are in millimeters. If a Cad file is required please visit www.mechline.com.

MECHLINE

MECHLINE DEVELOPMENTS LIMITED
Tel: +44 (0)1908 261511 | Email: info@mechline.com | Web: www.mechline.com

©2019 All rights reserved. All material on these pages, including and without limitation text, logos, icons, photographs and all other artwork, is copyright material of Mechline Developments Ltd, unless otherwise stated. Commercial use of this material may only be made with the express, prior, written permission of Mechline. This includes material provided by any third party, including material obtained through links to other sites from Mechline's pages or its af liates and commercial associates. Material and information included are correct at time of print. Intending buyers and users must satisfy themselves as to the suitability and safety of the products for their particular purposes and duties. Dimensions shown in mm unless otherwise stated. Product accreditation may not apply to all products in the relevant range. Please contact Mechline to con rm. Unless otherwise stated, all products carry a warranty of twelve (12) months against manufacturing defect or workmanship on parts with no inclusion for labour or site attendance.